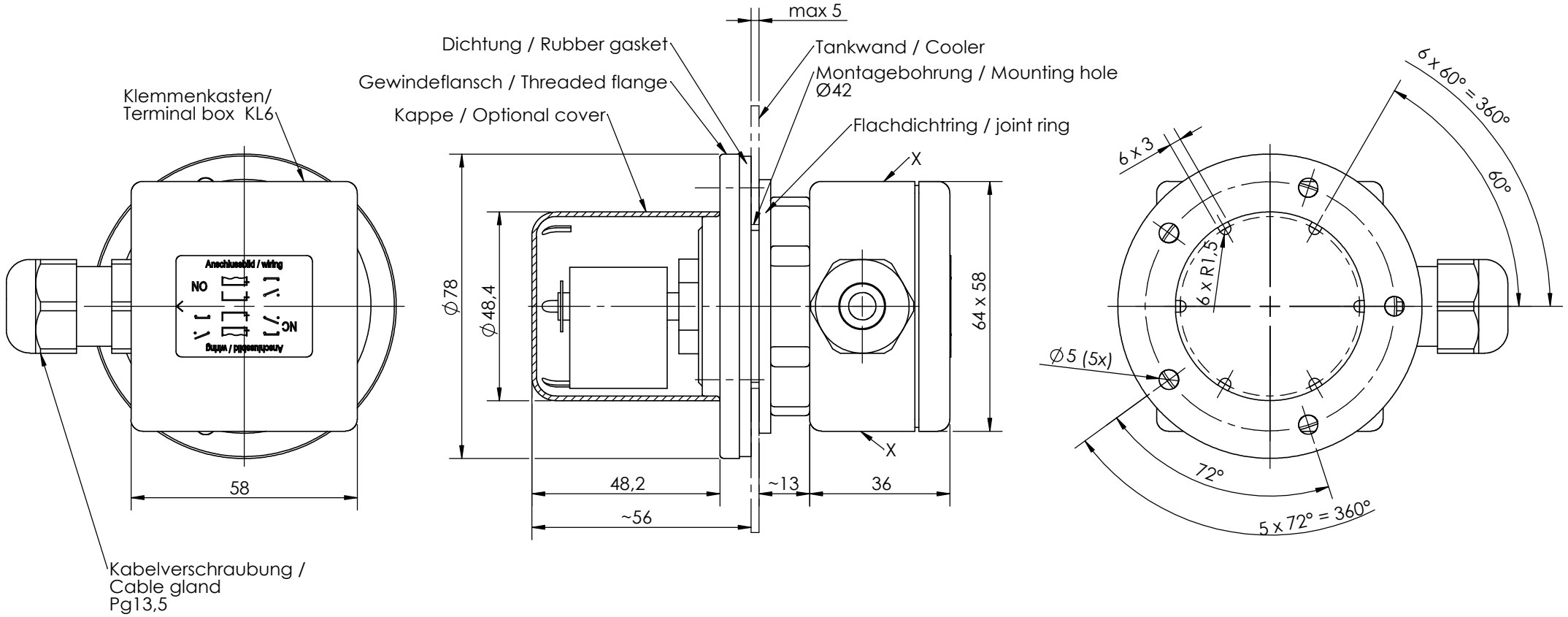

X: Typenschild (2x)
Nameplate (2x)

Electrical Rating
240V/AC 200V/DC, 1A, 50W/VA

Werkstückkanten nach DIN ISO 13715 /
WORKPIECE EDGES ACCORDING TO DIN ISO 13715:

Copyright DIN 34			date	name	scale 1:1	Barksdale CONTROL PRODUCTS
general allowance acc. DIN ISO 2768-mK	surfaces acc. DIN EN ISO 1302	drawn	24.09.20	NITIN	material	
		checked				
		appr.				

title
UNS-ABS-Horizontal
ABS / PP, NO / NC

rev.	change	date	eco#	name
-	neu	24.09.20	190	nn

drawing number	order	sheet
923-2800	0111-751	1 OF 1

Barksdale GmbH Dorn-Assenheimer-Str.27 D-61203 Reichelsheim